A Topological Perspective on Diagnosis

Sophie Pinchinat, IRISA Rennes

joint work with
Andreas Bauer, ANU, Canberra

WODES, Gothenburg, Sweden, May 28-30, 2008

Marie Curie Action MASLOG 021669 (FP6-2004-Mobility-6)

Introduction

- We consider a set of infinite sequences (of events).
- A property is given by a set of ω-sequences.
- A particular infinite sequence is partially observed.

What can we infer from this incomplete information about the sequence regarding the property ?

Applications: Diagnosis and Control of DES, Game Theory

Mathematical Framework

- $\Sigma \ni a, b, l, \ldots$ an alphabet

  $\Sigma^\omega \ni w, w', \ldots$ ω-Sequences
  $\mathcal{P}(\Sigma^\omega) \supseteq L, S, \ldots$ Properties (ω-languages)

- Δ an observation alphabet

  $\Delta^\omega \ni \pi, \ldots$ ω-Observations

- A morphism $m : \Sigma \to \Delta^*$ (like $P : \Sigma \to \Sigma_o \subseteq \Sigma$)

- The Observational Equivalence $\approx \subseteq \Sigma^\omega \times \Sigma^\omega$

  "having the same m-image"

The Problem

Given $L \subseteq \Sigma^\omega$ and an incremental infinite chain of observations

$$\tau_1 < \tau_2 < \ldots < \lim_{i \to \infty} (\tau_i) = \pi$$

when and what can we infer regarding membership in L?

That is: if an ω-sequence w is consistent with the ω-observation π,

when and what can we infer about $w \in L$?

Abstraction: $[w]_\approx = \{w' \in \Sigma^\omega \mid w' \approx w\}$

- The $\approx$-saturation of L $\quad (L)_\approx := \bigcup_{w \in L} [w]_\approx$

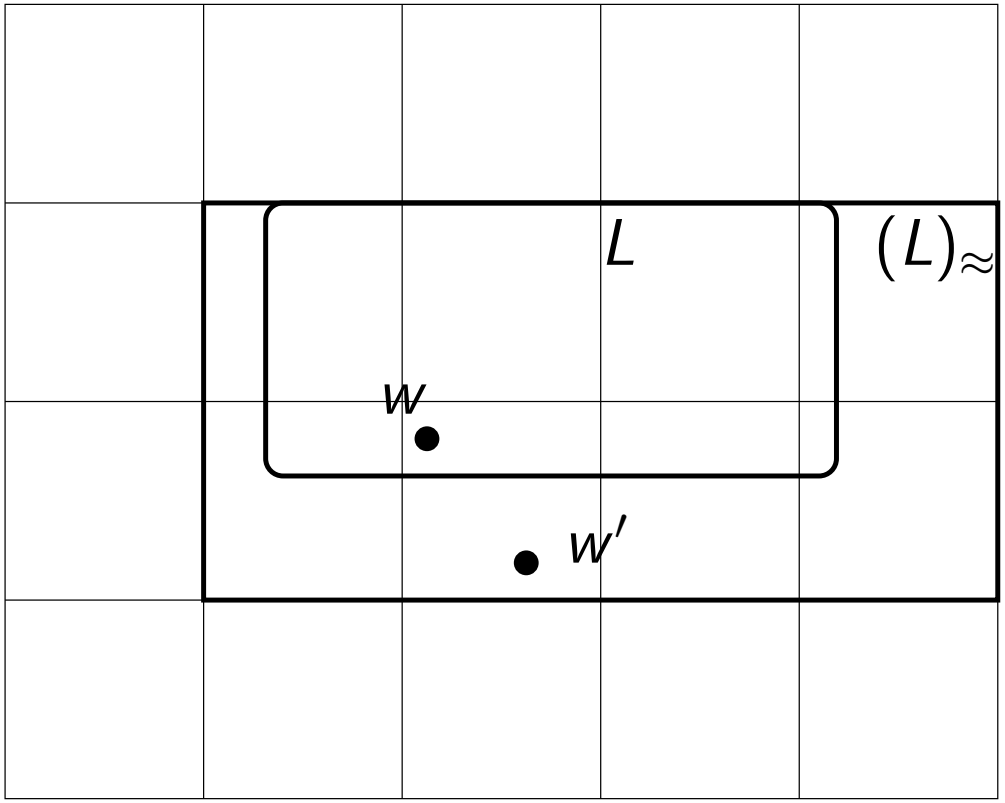

- $(L)_\approx$ and $m(L)$ are the same objects: $(L)_\approx = m^{-1}(m(L))$

In the paper

1. As if L is not $\approx$-saturated, we cannot tell much, deciding $L = (L)_{\approx}$ is crucial The Saturation Problem
   - The results are given for an arbitrary ω-regular language L and an arbitrary $\sim \in Rat(\Sigma^{\omega} \times \Sigma\omega)$
   - Lower bound complexity of the problem, reached when $\sim$ is $\approx$
   - An optimal decision procedure

In the paper

1. As if L is not $\approx$-saturated, we cannot tell much, deciding $L = (L)_{\approx}$ is crucial The Saturation Problem
   - The results are given for an arbitrary ω-regular language L and an arbitrary $\sim \in Rat(\Sigma^{\omega} \times \Sigma\omega)$
   - Lower bound complexity of the problem, reached when $\sim$ is $\approx$
   - An optimal decision procedure
2. $w \in L$ cannot be inferred in a finite amount of time in general (eg, infintely often a), unless $L = B\Sigma^{\omega}$ where $B \subseteq \Sigma^{*}$
   $\Leftrightarrow$ L is an open set in the Cantor Topology

   The Openness Problem
   - Prediagnosability [Jiang-Kumar04]
   - Decision procedure for Openness [Landweber69,Alpern-Schneider87]
     Lower bound is unknown for non-deterministic Buchi

Next in the paper

- Merging Points 1 and 2 by an adequate topology

  Open sets are $(B)_{\approx}\Sigma^{\omega}$ (with $B \subseteq \Sigma^*$)
  $=$ Open sets in the space Δ^{ω}

- We distinguish a subspace S of Σ^{ω}
  - $\approx$-saturation in S: $L \cap S = (L)_{\approx} \cap S$
  - Openness in S: $L \cap S = B\Sigma^{\omega} \cap S$ (with $B \subseteq \Sigma^*$)
  - Decision Problems (S is a close set)

- Relation with classic Diagnosis [Sampath-Sengupta-Lafortune-Sinaamohideen-Teneketzis96]: a comparison with the twin-plant algortihm [Jiang-Huang-Chandra-Kumar04]

  see also [Jeron-Marchand-P-Cordier06]

The ($\approx$-)Saturation Problem

Given

1. An ω-regular language L
   (given by a non-deterministic Buchi automaton $\mathcal{A}$ over Σ)
2. A relation $\approx \subseteq \Sigma^\omega \times \Sigma^\omega$
   (given by $m : \Sigma \to \Delta^*$ alphabetic, ie $|m(a)| \leq 1$, $\forall a \in \Sigma$)

$$\text{Decide } L = (L)_\approx ?$$

- Lower bound: if NO OBSERVATION then $(L)_\approx$ equals Σ^ω
  The Universality Problem is PSPACE-complete
- Upper bound: there exists a PSPACE algorithm, as
  - $\approx \in Rat(\Sigma^\omega \times \Sigma^\omega)$, and
  - $L = (L)_\approx$ is equivalent $\approx \cap (L \times L^c) = \emptyset$

$\approx \in Rat(\Sigma^\omega \times \Sigma^\omega)$

$P : \{a, b, l\} \to \{a, b\}$, let $w = alblaa$ and $w' = llaballa$

Read input on $\begin{cases} \text{Tape 1} & \text{if state is grey,} \\ \text{Tape 2} & \text{otherwise.} \end{cases}$

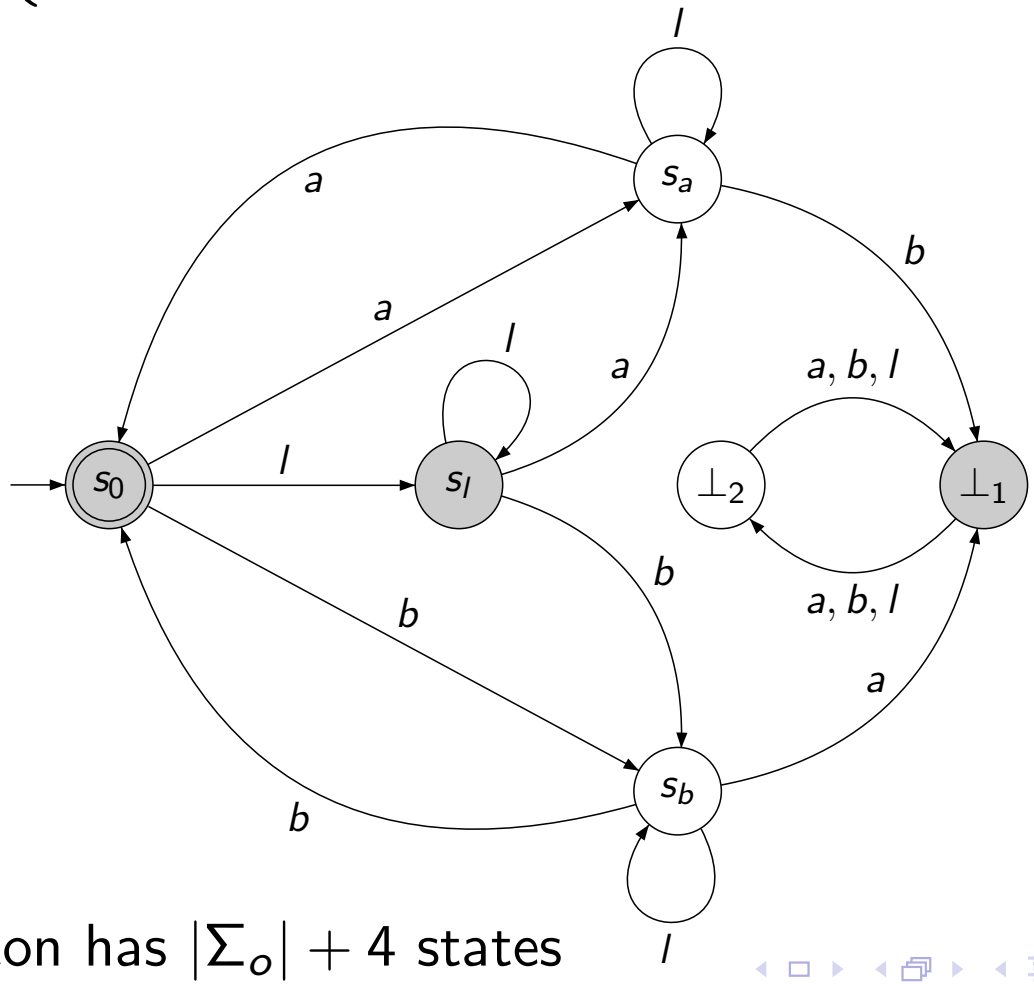

The 2-automaton has $|\Sigma_o| + 4$ states

$$\approx \cap (L \times L^c) \in Rat(\Sigma^\omega \times \Sigma^\omega)$$

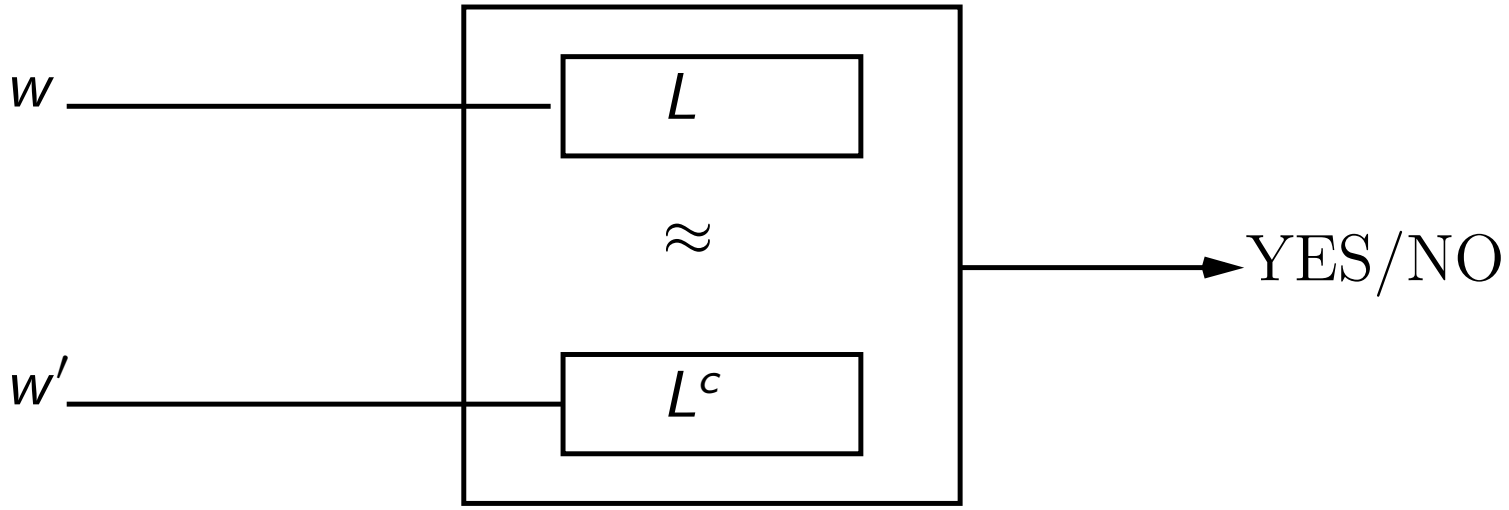

Decide emptiness by projecting on each component

A PSPACE algorithm (case $\approx$)

- Construct a non-deterministic Buchi $\mathcal{B}$ which accepts L^c

  It has $O(2^{|\mathcal{A}| \log |\mathcal{A}|})$ states, eg [klarlund91]

- The 2-automaton Θ' is like Θ but
  componentwise constrained by $\mathcal{A}$ and $\mathcal{B}$

  It has $O((|\Sigma_o| + 4) \cdot |\mathcal{A}| \cdot 2^{|A| \log |\mathcal{A}|})$ states
  encoded in space $O(\log(|\Sigma_o| + 4)) + \log |\mathcal{A}| + |A| \log |\mathcal{A}|)$

- The algorithm guesses an accepting run of Θ'
  a sequence of states $r_0 r_1 \ldots r_i \ldots r_n$ with
  r_0 initial, r_i accepting, and $r_i = r_n$.

  $+ \mathrm{NPSPACE} = \mathrm{PSPACE}$ [Savitch70]

The Algorithm

1. Let r be the initial state of Θ'
2. Choose a state r'
3. If r' is a successor of r, let $r = r'$
   else halt (without accepting)
4. If r is accepting, goto 5 or 2, else goto 2
5. Let $r_A = r$ // guess it is r_i
6. Choose a state r'
7. If r' is a successor of r, let $r = r'$
   else halt (without accepting)
8. If $r = r_A$, accept, else goto 6

Concluding Remarks

- An adequate topology on ω-languages to handle partial observation, with two concepts

Openness and Saturation

- Application to diagnosis of DES with non-deterministic ω-regular supervision patterns
- A machinery to decide Saturation. Extension to $k+1$-automata for decentralized control under partial observation.